PELKO Motors®

New

8038B-5

80x80x38mm (3.15x3.15x1.5in) - 5 blade

Bearing System— 2 Ball Bearing
Life Expectancy— Ball 77000hrs @ 10000RPM @ 30°C
Frame---------- Thermoplastic PBT+30% GF, UL94-V0
Impeller---------- Thermoplastic PBT+15% GF, UL94-V0
Lead Wire---------- UL 1061, AWG 22, 260±10mm, Red(+), Black(-)
Protection---------- Locked rotor protection
IP Grade ---------- IP51, IP54, IP56, IP67,IP68

RoHS CE c UL us

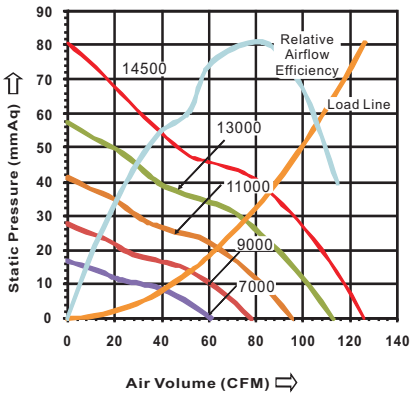

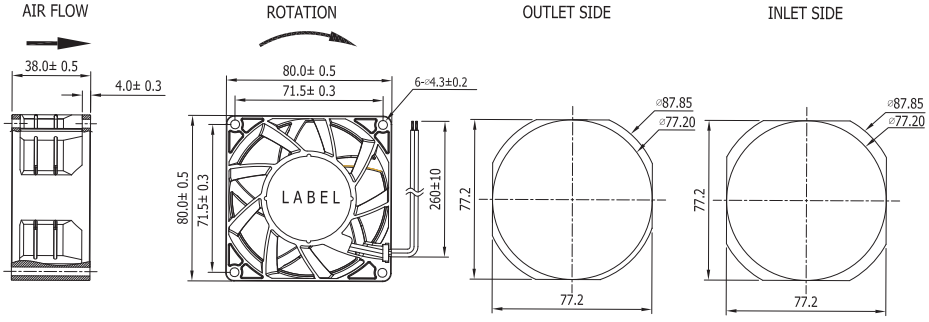

Dim: 493x339x218mm
N.W.: 12.6 kgs
G.W.: 14.1 kgs
Q'TY: 60 pcs

TÜV CERT
IATF16949:2016
ISO 9001:2015
ISO 14001:2015

FUNCTIONS	PART NUMBER	RATED (VDC)	LABEL CURRENT	ACTUAL CURRENT	POWER (WATTS)	SPEED (RPM)	AIRFLOW (CFM)	AIRFLOW (m^3/min)	PRESSURE (mmAq)	PRESSURE (In H^2O)	NOISE (dBA)	WEIGHT (Q'TY/CTN)
1a:IR 1b:AS 2a:FG 2b:RD 2d:LDb 3a:VPWM 3c:PPWM 7a:CS	K8038Y12BPLBxy-5	12 (8~13.2)	4.900	3.000	36.00	14500	126.20	3.57	80.93	3.19	67.10	210g (60pcs)
	K8038X12BPLBxy-5		3.320	2.300	27.60	13000	112.89	3.20	57.63	2.27	63.80	
	K8038H12BPLBxy-5		2.020	1.550	18.60	11000	95.52	2.71	41.26	1.62	60.20	
	K8038M12BPLBxy-5		1.300	1.000	12.00	9000	78.16	2.21	27.62	1.09	54.60	
	K8038L12BPLBxy-5		0.820	0.650	7.80	7000	60.79	1.72	16.71	0.66	48.50	
	K8038Y24BPLBxy-5	24 (15~26.4)	2.410	1.400	33.60	14500	126.20	3.57	80.93	3.19	67.10	210g (60pcs)
	K8038X24BPLBxy-5		1.760	1.100	26.40	13000	112.89	3.20	57.63	2.27	63.80	
	K8038H24BPLBxy-5		1.070	0.700	16.80	11000	95.52	2.71	41.26	1.62	60.20	
	K8038M24BPLBxy-5		0.680	0.450	10.80	9000	78.16	2.21	27.62	1.09	54.60	
	K8038L24BPLBxy-5		0.400	0.260	6.24	7000	60.79	1.72	16.71	0.66	48.50	
	K8038Y48BPLBxy-5	48 (36~57)	1.240	0.700	33.60	14500	126.20	3.57	80.93	3.19	67.10	210g (60pcs)
	K8038X48BPLBxy-5		0.880	0.550	26.40	13000	112.89	3.20	57.63	2.27	63.80	
	K8038H48BPLBxy-5		0.570	0.350	16.80	11000	95.52	2.71	41.26	1.62	60.20	
	K8038M48BPLBxy-5		0.360	0.230	11.04	9000	78.16	2.21	27.62	1.09	54.60	
	K8038L48BPLBxy-5		0.190	0.130	6.24	7000	60.79	1.72	16.71	0.66	48.50	

Remark:
1. Part no. suffix: "xy"=Function detail or "x"=Function number. and "y"=customer ID
2. K series - Multifunction Extra High Performance series:
   Uses single coil differential type drive with the highest efficiency and the maximum airflow performance with the complete line of functions and with Airflow and Pressure higher than the P series.